Service Training

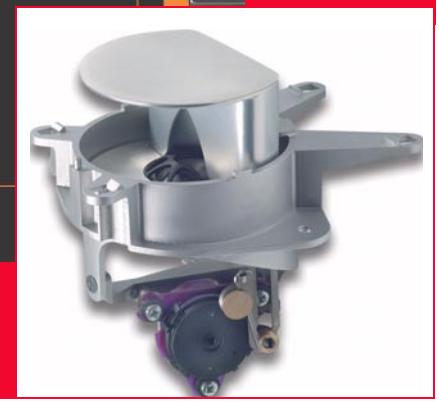

Audi Infotainment Systems '05

- Bang & Olufsen Audio System
- Digital radio tuner
- Television hybrid tuner

Self-Study Programme 366

Digital Infotainment

Audi is a name synonymous with outstanding, innovative automotive engineering. A number of brand names spring to mind: quattro®, FSI® and MMI, the pioneering Multi Media Interface, are just a few of the many achievements that have had a profound impact on automotive manufacturing. Once again, the brand name Audi lives up to its slogan "Vorsprung durch Technik".

With the digital radio, the television hybrid tuner and the Bang & Olufsen Audio System, Audi offers digital infotainment systems that represent a significant addition to the standard product package in terms of variety and quality.

Customary ease of use

One of the outstanding features of cutting-edge technology is its ease of use. The tried and tested, and yet still pioneering, operating concept of the MMI (Multi Media Interface) ensures maximum functionality and ease of use thanks to its intuitive navigation technology.

The large, high-resolution screen makes for clear presentation of all operator menus in the MMI, as well as user-friendly presentation of all relevant additional information. The digitisation of signals greatly simplifies the handling of information: This simplifies the processing of audio and visual signals while reducing the volume of data. Unlike analog broadcasting, digital information can be reproduced and broadcast almost without loss of quality.

Video and audio can now be combined with textual information

Digital reception also opens up additional possibilities for information processing and distribution.
In addition to the actual broadcast content, innovative services are broadcast with digital programmes.
These are: Audio and visual signals can combined with textual information thanks to digital broadcasting.
This information can refer to current programmes such as title, artist (with DAB) and the Electronic Programme Guide (EPG) for DVB-T.
On the other hand, the information can also be unrelated to the current programme, such as messages, weather reports or traffic messages for DAB. These new features will make digital receivers even more attractive in future.

Contents

Bang & Olufsen Audio System 4

Overview of the components 5
Function diagram 6
Treble loudspeakers in dash panel 8
Integrated loudspeaker systems 9
Digital sound package control unit J525 10
Digital sound package control unit 2 J787 16

Digital radio tuner (DAB) 18

DAB technology 18
Digital radio R147 21

TV hybrid tuner (analog and DVB-T) 24

DVB-T technology 24
TV hybrid tuner 26
Aerials 33
Diagnostics 33

This self-study programme teaches the design and function of new vehicle models, new automotive components or new technologies.

The self-study programme is not a workshop manual!
All values given are intended as a guideline only, and refer to the software version valid at the time of publication of the SSP.

Please refer to the relevant Service Literature for current inspection, adjustment and repair instructions.

Reference

Note

Bang & Olufsen Audio System

Bang & Olufsen is a Danish manufacturer of high-end entertainment electronics.
Bang & Olufsen attaches particular importance to performance, design, human expectations and perfect workmanship. The goal for the development of the Bang & Olufsen Advanced Sound System was to build the best sound system ever used in a motor vehicle. This applies both to the sound and to the ease of use and the design.

Particular attention was paid to the acoustic quality of the sound system.
A motor vehicle places special demands on a sound system. The listeners are not seated at the auditory centre of the loudspeakers. They are seated at different distances to the loudspeakers. The loudspeaker position is, to a large extent, predefined by the requirements relating to the occupant cell. The materials used to build the vehicle body and interior also affect the quality of the sound system.

Centre
– 70 mm centre treble loudspeaker

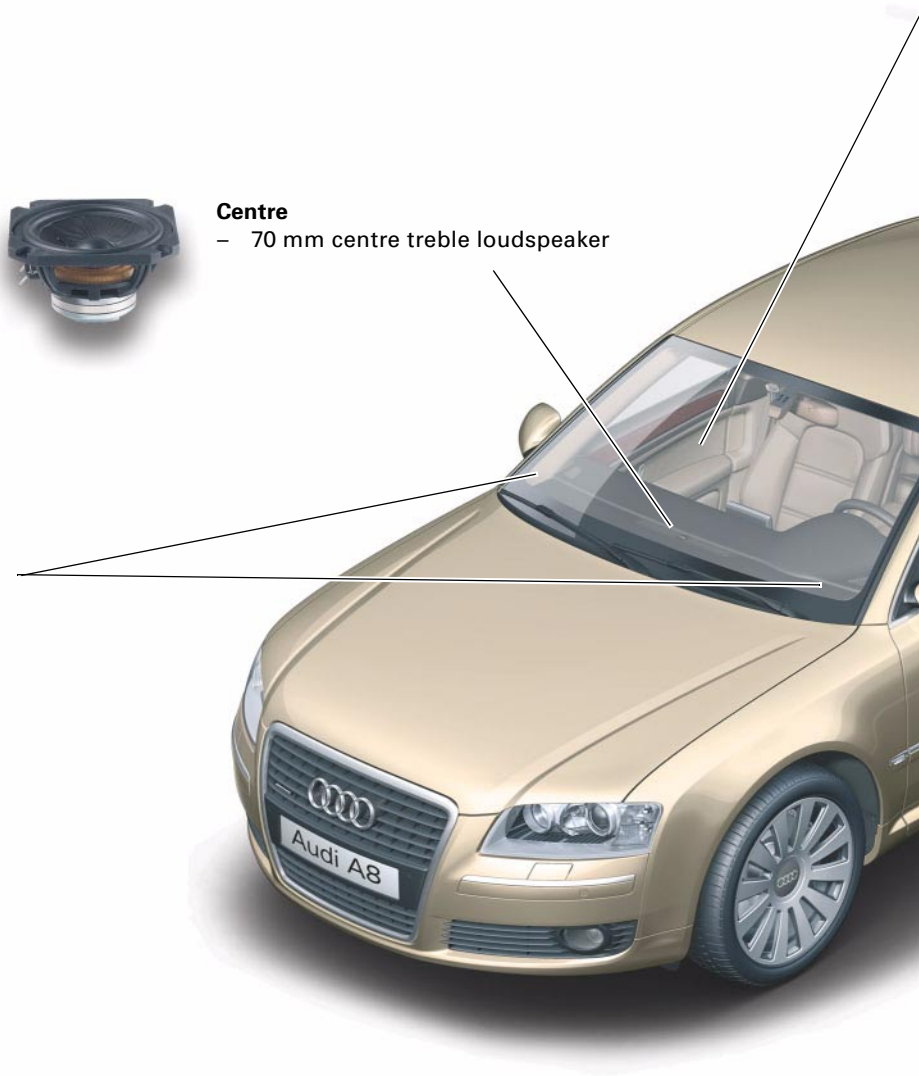

Acoustic lens
– 2 x 19 mm treble loudspeaker

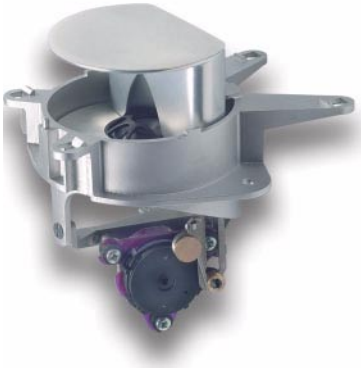

Overview of the components

The Bang & Olufsen Advanced Sound System comprises a total of 14 loudspeakers. The loudspeakers are driven by 2 amplifiers with 14 output channels. The amplifiers have a total power output of over 1000 W.

Front doors
– 90 mm mid-range loudspeaker
– 140 mm bass loudspeaker

Rear shelf
– 200 mm long-stroke subwoofer
– 2 x 70 mm mid-range loudspeaker

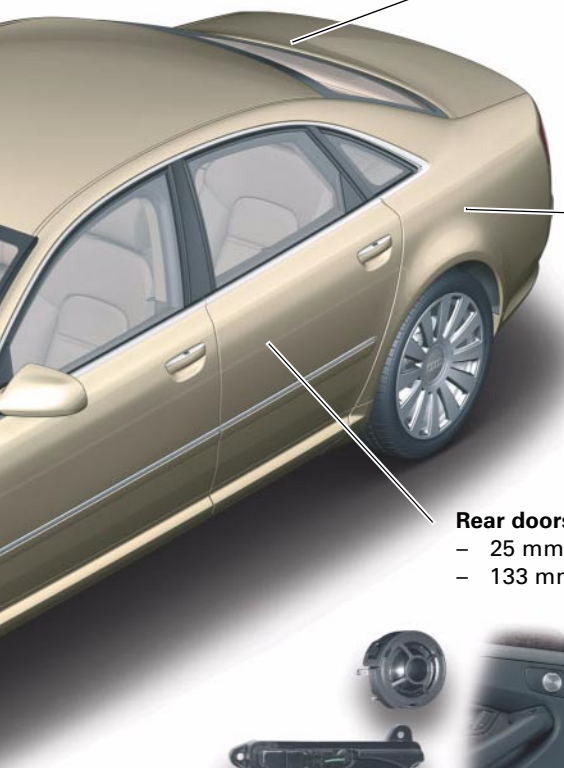

Amplifier
J787 Digital sound package control unit 2
– 4 x 125 W Class D
– 1 x 250 W Class D

J525 Digital sound package control unit
– 9 x 28 W MOST DSP

Rear doors
– 25 mm treble loudspeaker
– 133 mm bass loudspeaker

366_054

Function diagram

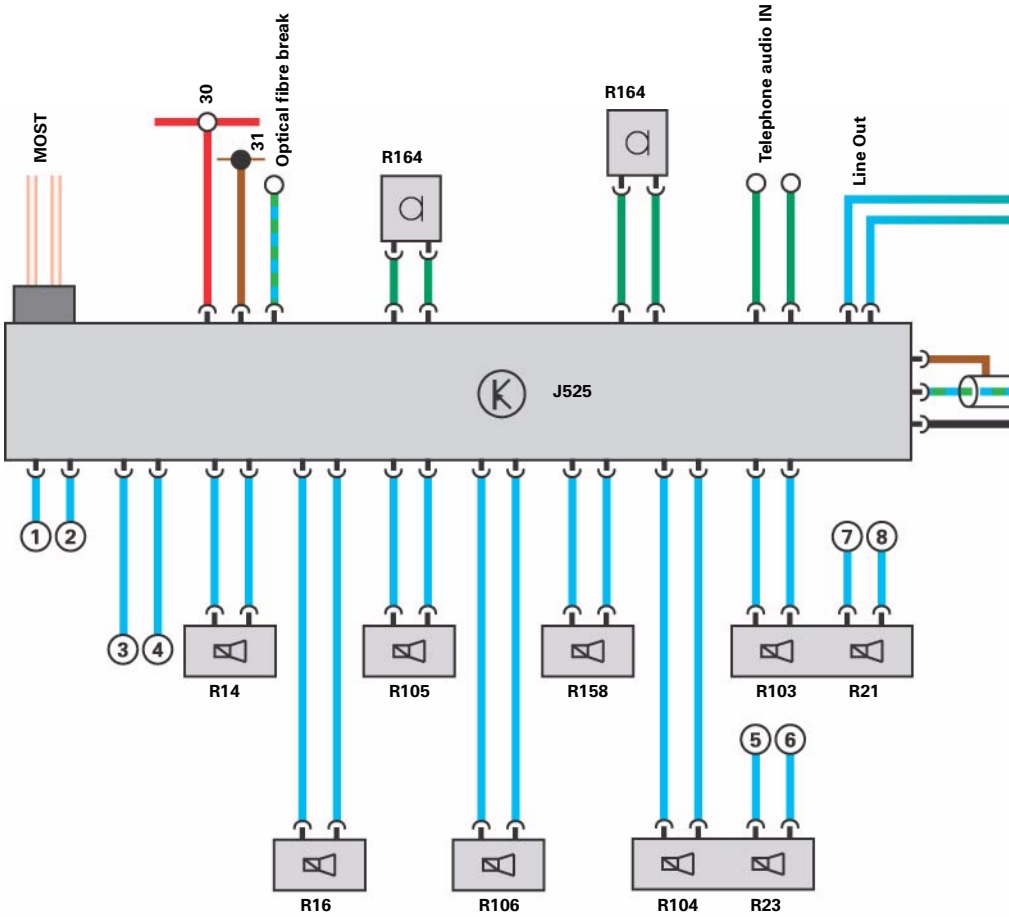

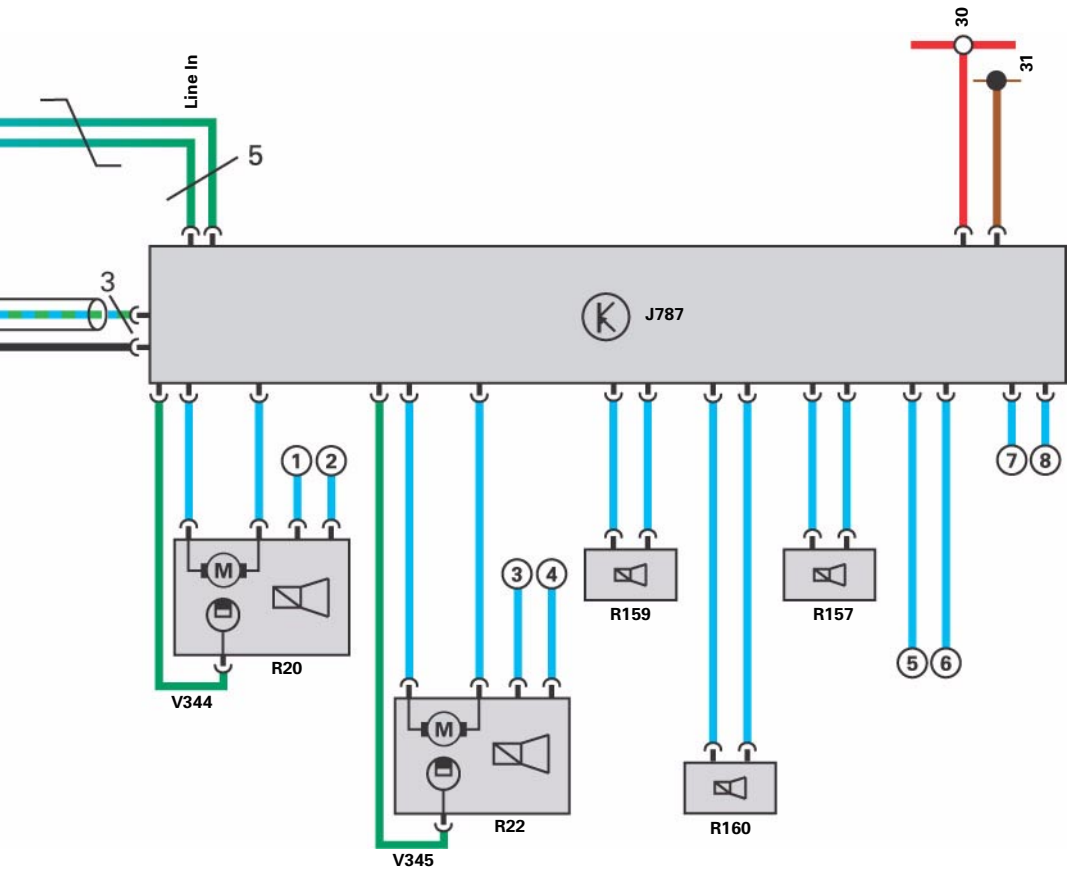

366_001

Legend

J525 Digital sound package control unit
J787 Digital sound package control unit 2

R14 Rear left treble loudspeaker
R16 Rear right treble loudspeaker
R20 Front left treble loudspeaker
R21 Bass loudspeaker, front left
R22 Front right left treble loudspeaker
R23 Bass loudspeaker, front right
R103 Front left mid-range loudspeaker
R104 Front right mid-range loudspeaker
R105 Rear left mid-range loudspeaker
R106 Rear right mid-range loudspeaker
R157 Subwoofer in rear shelf
R158 Mid-range/treble loudspeaker, centre
R159 Mid-range/treble loudspeaker, rear left
R160 Mid-range/treble loudspeaker, rear right
R164 Microphone unit in front roof module

V344 Front left treble loudspeaker control motor
V345 Front right treble loudspeaker control motor

Treble loudspeakers in dash panel

Two 19 mm treble loudspeakers are fitted in the dash panel. The loudspeakers are extended by an electric motor when the MMI is switched on. The extended position of the loudspeaker is monitored by an integrated Hall sender.

An integrated worm gear is used to reduce the motor speed to the crank speed. The rotation of the crank is translated via a connecting rod to a linear movement of the treble loudspeaker.

If the load on the drive is too high when the treble loudspeakers are extending, e.g. because someone is holding on to them, the connecting rod disengages from the crank drive. The roller on the crank slides along the slotted connecting rod. The worm gear is thus protected against mechanical damage. If the treble loudspeakers are subsequently retracted fully, the connecting rod re-engages in the crank during this movement so that the loudspeakers subsequently extend fully.

If an extended loudspeaker is pushed down mechanically, e.g. by hand, the mechanism behaves in exactly the same way. The connecting rod is disengaged when the loudspeaker is pushed down. If the treble loudspeaker is retracted by MMI, the crank is moved into the lowest position and the connecting rod re-engages.

An acoustic lens which provides optimal sound radiation into the vehicle interior is attached to the treble loudspeakers. The acoustic lens allows optimally directed reflection of the sound into the vehicle interior. The lens shape specially designed for well-balanced horizontal sound distribution. The result is much better acoustics than in a conventional system, where the front windscreen, among other things, acts as a sound reflector.

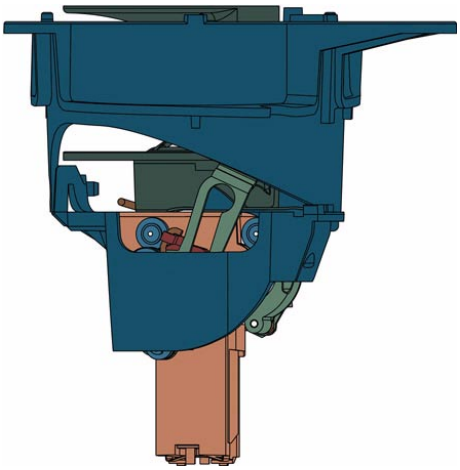

Treble loudspeaker retracted *366_005*

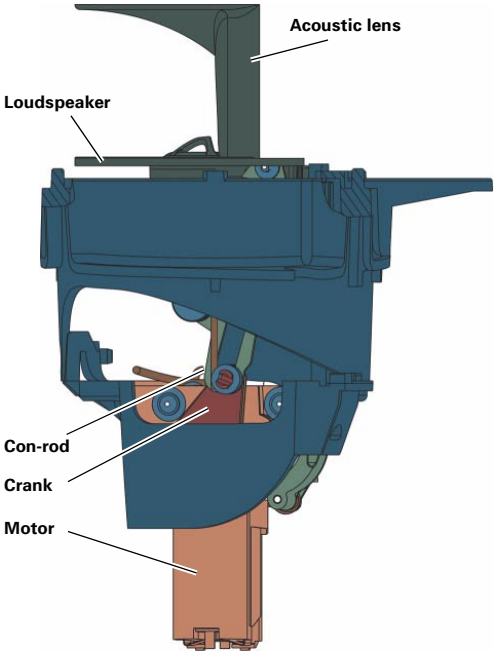

Treble loudspeaker extended *366_006*

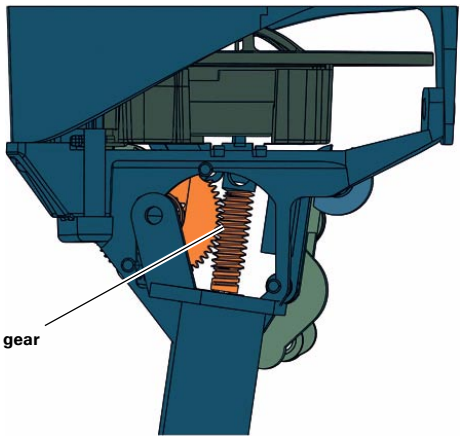

Drive *366_008*

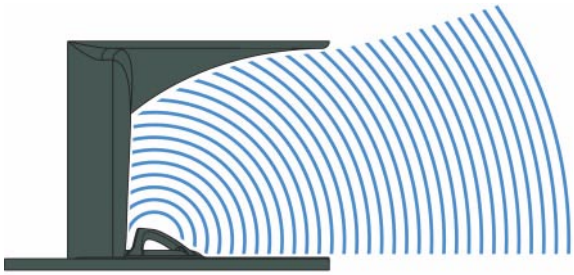

No reflection off windscreen *366_015*

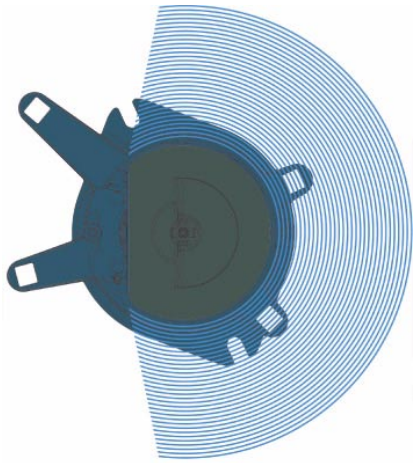

Wide horizontal sound radiation *366_016*

Integrated loudspeaker systems

All mid-range loudspeakers, bass loudspeakers and the subwoofers are designed as fully integrated loudspeaker systems. The housings for the respective loudspeakers have been optimised for minimum vibration. This prevents uncontrolled vibration of the vehicle body and interior trim panels. The result is enhanced sound clarity and definition. Noise radiation away from the vehicle is greatly reduced since the body's outer skin no longer functions simultaneously as a loudspeaker box.

However, due to the smaller housing volume compared to non-integrated loudspeaker systems, additional amplifier power is required to achieve the same sound pressure level in each loudspeaker. The sound pressure level is a measure of the volume of a loudspeaker and is measured in dB (decibels). A 10 dB increase in sound pressure is equivalent to doubling the volume.

366_055

366_056

Digital sound package control unit J525

The digital sound package control unit consists of an audio amplifier equipped with a powerful digital signal processor (in short: DSP).

The amplifier converts the digital stereo signal from the MOST bus to the individual audio channels and controls 9 loudspeakers and the digital sound package control unit 2 J787.

In addition, the DSP adapts the audio signals to the specific sound characteristics of the Audi A8 '03.

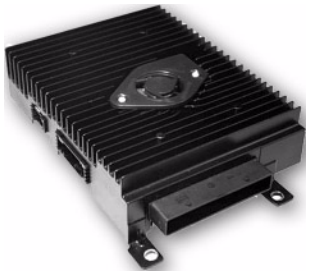

366_058

Automatic source volume correction

Different audio sources, such as radio, CD, DAB, etc., transmit different music and voice at different volumes. This is principally due to the fact that different radio stations broadcast their programmes at different volumes, and because audio CDs are recorded at different volumes.

The digital signal processor in the amplifier recognises the volume and adjusts all sources in such a way that the listener notices no change in volume after selecting a different audio source, e.g. from radio to CD.

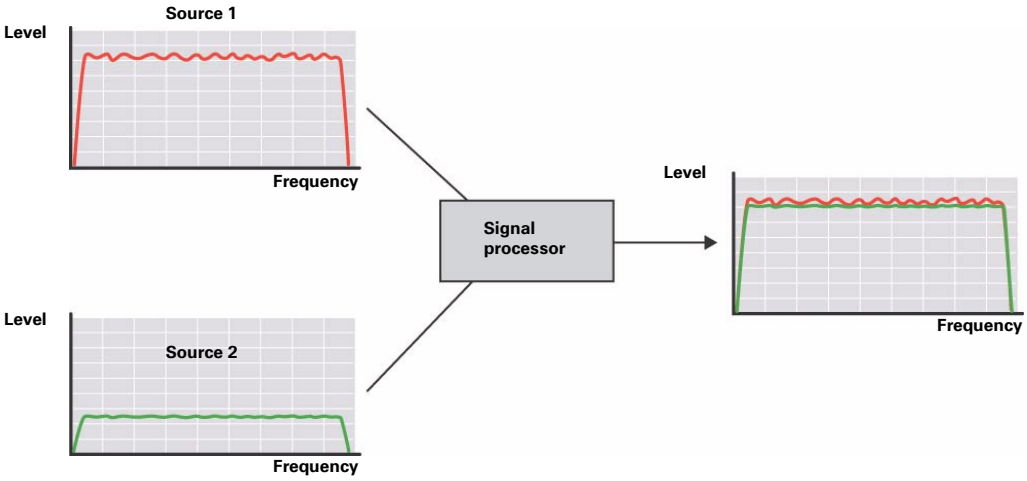

366_017

Frequency response correction

The acoustic properties of vehicle interiors are less than optimal, unlike rooms designed specially for this purpose in buildings. To optimise in-vehicle acoustics, the digital signal processor corrects the frequency response, i.e. bass, mid range and treble are adjusted digitally. Sound frequencies that are amplified by the vehicle interior are output in an attenuated form by the amplifier. Sound frequencies that are heavily attenuated by the vehicle interior are output in an amplified form. The digital signal processor also functions as a frequency splitter.

The sounds transmissible from the respective loudspeakers are transmitted to the loudspeaker.
A treble loudspeaker receives only high frequencies, since the high energy of the low frequencies would destroy the treble loudspeaker coil. A bass loudspeaker receives only low frequencies, since the large mass of the loudspeaker coil would be much too slow for the transmission of high frequencies. The result for the listener is a well-balanced auditory experience across the frequency range from very low to very high frequencies.

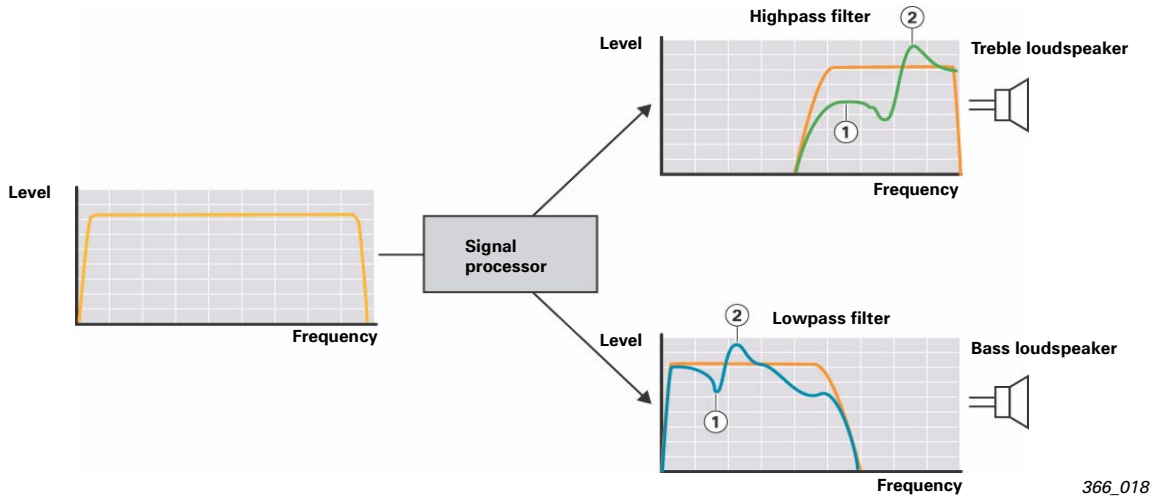

1 attenuated frequency
2 amplified frequency

Bass and treble are also corrected digitally in the MMI and additionally in the amplifier for radio or TV, CD, DAB.

Fabric and leather interior trims have different acoustic properties. To adapt the loudspeaker signals optimally to the vehicle, the interior trim material can be selected in the amplifier configuration using the diagnostic tester.

Position-dependent volume correction

The listeners are not seated in the auditory centre in the vehicle interior, i.e. equidistant from the left and right loudspeakers. To compensate for the different distances which the sound travels from each individual loudspeaker to the ears of the listener, the volume is corrected in the digital signal processor for each loudspeaker.

The balance and fader settings in the MMI are also made digitally in the amplifier.

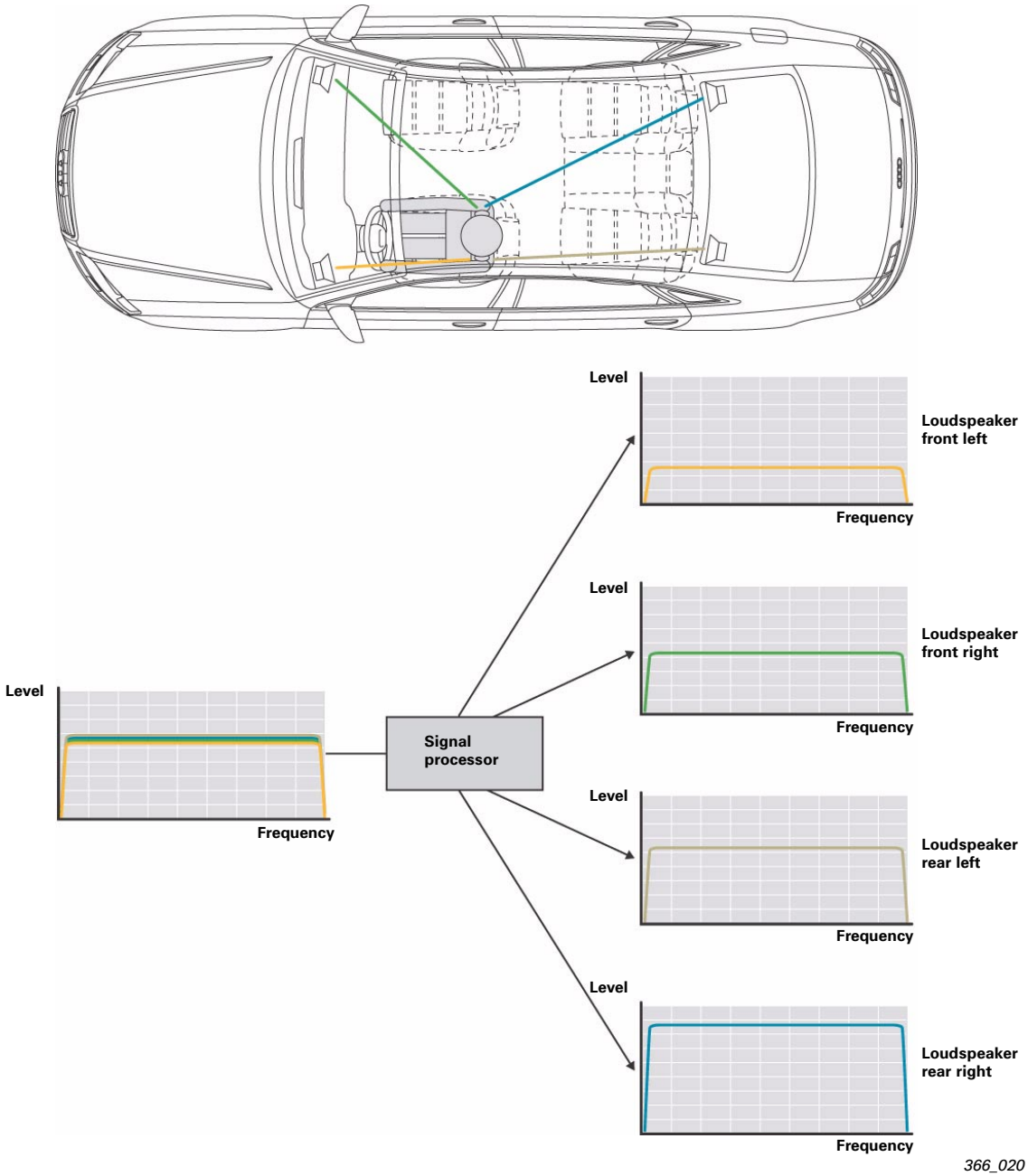

Volume equalisation
(dynamic driving noise compensation)

While driving, the engine, tyres and headwind, for instance, produce background noise which negatively affects the listening experience.
To compensate for this effect, various parameters are monitored:

- Road speed (via MOST bus)
- Air conditioner blower speed (via MOST bus)
- Background noise via a measuring microphone integrated in the overhead module

These parameters are used for correcting volume and frequency response. At high ambient noise levels, the human ear does not respond nearly as well to low-volume music than to loud music.
To compensate for this effect, low-volume music is amplified to a higher degree than loud music with increasing vehicle speed. To the listener, the sound system appears to maintain a constant volume irrespective of the speed at which the vehicle is travelling.

To compensate for personal listening preferences, the volume can be equalised in a continuously variable manner in the MMI sound menu.

Petrol and diesel engines have different acoustic properties. Yo adapt the volume equalisation optimally to the vehicle, the engine type is encoded in the diagnostic tester. The variants left-hand drive and right-hand drive or short and long wheelbase version can be selected as coding options.

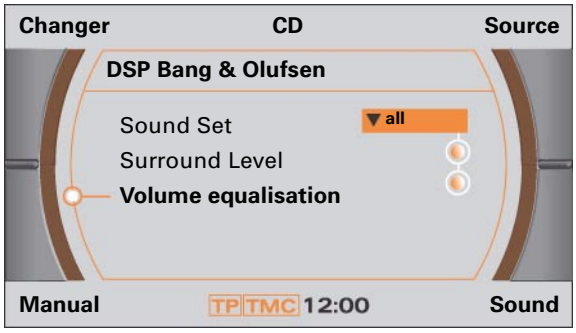

366_060

Loudspeaker signal propagation time correction

A propagation time correction is made for each individual loudspeaker. This correction compensates for the different distances which the sound travels from the individual loudspeakers to the listener's ears, producing a "surround sound". The listener has the impression of being seated before an orchestra in the centre of a concert hall.

Using the SOUND SET option in the MMI, the sound can be set to ALL, DRIVER, FRONT and REAR. In these MMI settings, the DSP corrections are adapted to the respective listener's seating position. The setting adapts both the propagation time and the volume of the loudspeaker signals. In all settings, the audio signals are output in surround sound.

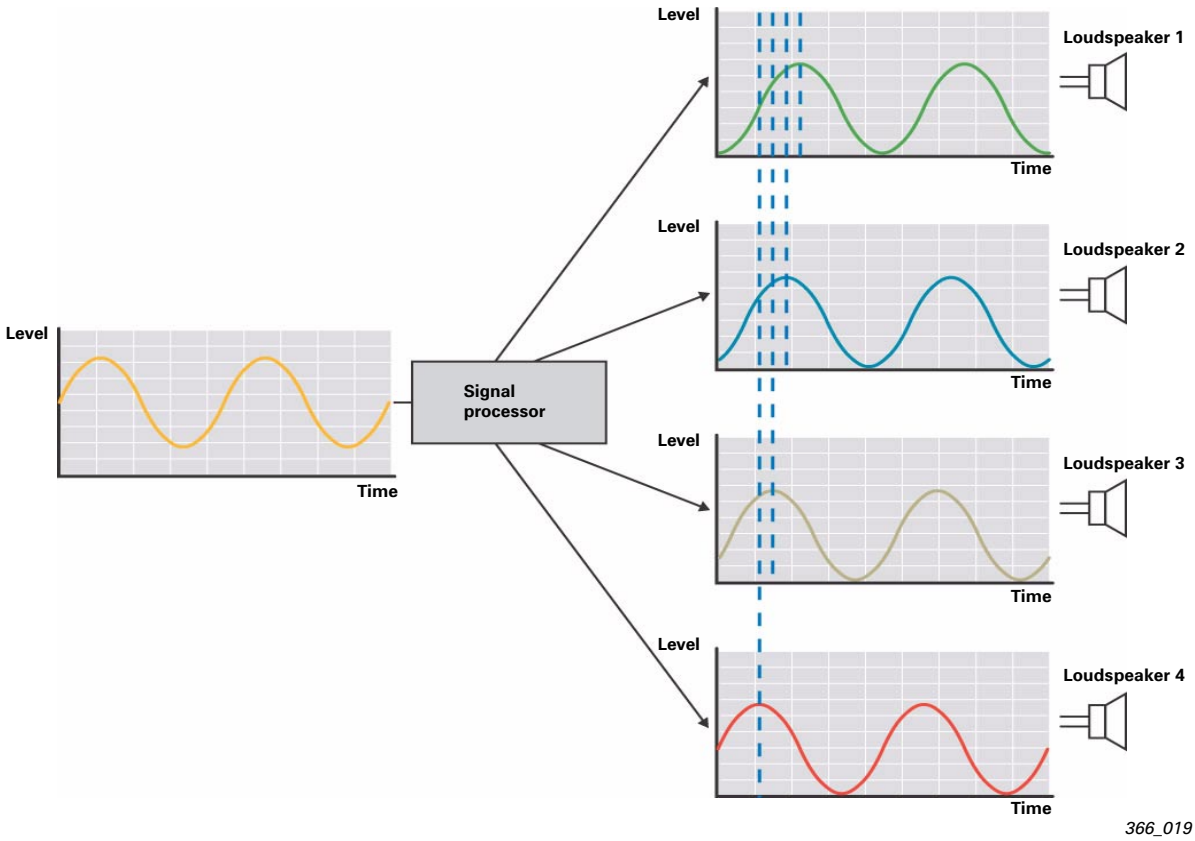

Surround Level

To create a three-dimensional sound, the signals from the loudspeakers are delayed in relation to each other in the digital signal processor.
The surround level can be set in the MMI. When the surround level is set to minimum, the audio signal is output in pure stereo, i.e. undelayed. The higher the surround level, the greater the three-dimensional sound effect. This effect is principally achieved by delaying the output signals of the rear loudspeakers in relation to the signals of the front loudspeakers.

The volume of the individual loudspeaker signals remains unchanged. The surround level therefore has no effect on the fader setting.

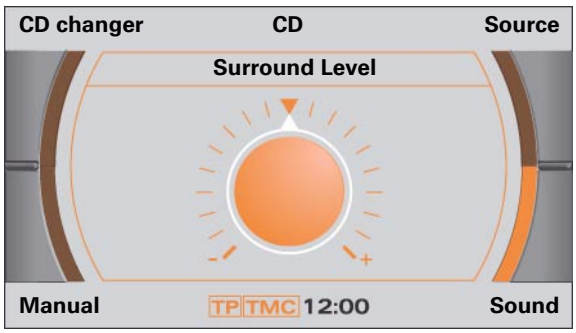

366_061

Entertainment Volume Reduction

During a navigation system announcement, the digital signal processor is capable of mixing the announcement and the audio source (e.g. CD).
The audio source volume during the navigation system announcement is adjustable under MMI menu item "Entertainment Volume Reduction".

Output signals

The amplifier sends the signals for the treble loudspeakers, the centre loudspeaker, the centre bass loudspeakers and the surround loudspeakers to the loudspeakers in an amplified form.
The signals for the bass loudspeakers and the subwoofers are transmitted in an non-amplified and analog form to the digital sound package control unit 2. The non-amplified signals are ground-free differential signals. Thus, the signals are well-protected from external interference.

Specifications

- MOST bus interface
- 2 microphone inputs
- Digital signal processor with 14 available outputs
- 9 x 28 W amplifier for mid-range, lens and surround sound
- 5 analog outputs and serial port for J787
- High-power 32-bit signal processor
- 24-bit digital-to-analog converter
- Hardware and voltage monitoring
- Fault memory
- Diagnostic function

Digital sound package control unit 2 J787

The digital sound package control unit 2 is an amplifier incorporating Class-D technology.
This technology makes possible a high amplifier power output with minimum power input.
Amplifier efficiency is approx. 95 %. Only approx. 5 % of energy consumed is converted to heat.
Because waste heat is reduced to a minimum, the vehicle's power management system works just as efficiently despite the system's high power.
The amplifier housing requires no cooling fins either. The waste heat from the amplifier is dissipated only through the closed aluminium housing. On the amplifier PCB is mounted a small fan which circulates the air within the amplifier and allows the complete housing to be used for heat radiation.

366_057

Functional principle of the amplifier

The digital sound package control unit 2 J787 operates as a digital amplifier.

In analog amplifiers, the input signal is amplified by a transistor according to the input voltage.
The transistor behaves in much the same way as a control valve. If the valve is half open, half the voltage is conducted to the loudspeakers. A fraction of the voltage is lost in the valve, i.e. a fraction of the power (= voltage drop x current) is converted to heat. For this reason, analog amplifiers require a large heat sink for high power outputs. This makes the amplifier large and heavy. In addition, the high power loss has a negative effect on power management.

Class-D amplifiers are much more effective in this regard. Unlike analog amplifiers, the transistors in digital amplifiers do not work as control valves, but as switches. When the switch is open, the full power is output to the loudspeakers. When the switch is closed, no power is output to the loudspeakers. As no current flows when the switch is closed, no power loss can occur in the amplifier.
The amplifier converts the analog input signals to pulse-width-modulated (PWM) signals.
The analog signal is converted into a pulsed current (square-wave signal sequence) with a much higher frequency than the highest music tones. Pulses are typically in the high kilohertz range.

This PWM signal is amplified so that the desired power is available at the output. The amplified signals are subsequently converted back to sine-wave signals in a lowpass filter comprising coils and capacitors in order that the required amplified analog signals are transmitted to the loudspeakers.

Despite the high power output, a 30A fuse (slow blow) is adequate for the amplifiers. This low fuse rating is achieved, among other things, by using capacitors. Acting as energy accumulators, the capacitors are built into the amplifier to ensure that short bass pulses, which have a high current demand, do not place undue strain on the onboard power supply.

Class-D amplifiers are classed as digital amplifiers based on their internal PWM principle. The "D" does not stand for digital. The Class-D technology was developed chronologically after the Class-C technology.

Treble loudspeaker motor drive

The instructions to extend or retract the treble loudspeakers are sent via the serial RS232 port from the digital sound package control unit J525 to the digital sound package control unit 2. The digital sound package control unit 2 controls the two electric motors for extending and retracting the front treble loudspeakers. The movement of the treble loudspeakers is monitored by a Hall sender integrated in the treble loudspeaker. The Hall sender is evaluated in the digital sound package control unit 2. It is used for blocked motor detection. If a blocked motor is detected, the electric motor is switched off.

Serial data interface between the amplifiers

The serial port is used for data transfer between the two amplifiers for the digital sound package. All information, such as control commands for the treble loudspeaker motors and diagnostic information, is transmitted along this data line. The digital sound package control unit 2 J787 does not have its own diagnostics address word. It is diagnosed entirely via the digital sound package control unit J525.

Switching the digital sound package control unit 2 J787 ON and OFF

There is a wake-up line from the digital sound package control unit J525 to the digital sound package control unit 2 J787. A pulsed signal is sent via this line from the digital sound package control unit J525 to the digital sound package control unit 2 J787. As long as the level of the signal is pulsed at regular intervals, the digital sound package control unit 2 J787 remains switched on. If the signal stays at a constant level, the digital sound package control unit 2 J787 cuts out.

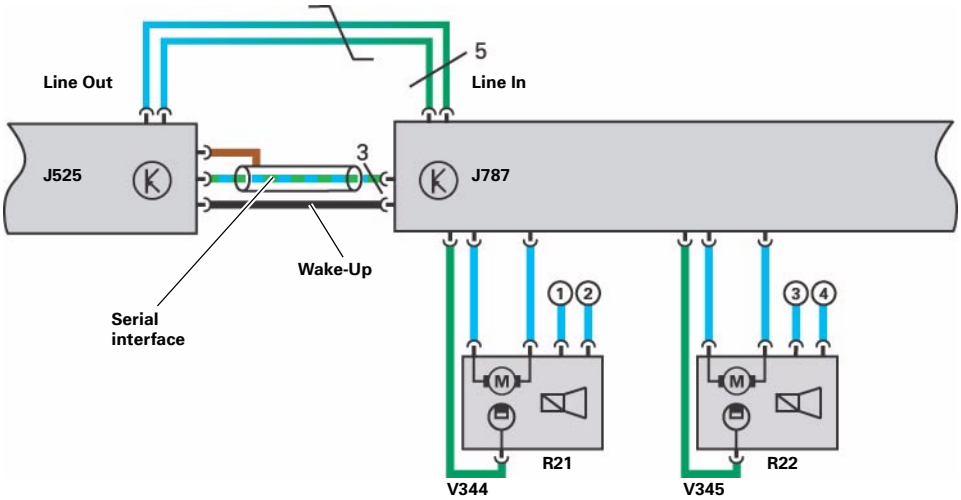

366_059

Specifications

- 1 x 250 W driven through 8 ohms (0.1 % total harmonic distortion THD) amplifier for subwoofers
- 4 x 125 W driven through 4 ohms (0.1 % total harmonic distortion THD) amplifier for bass reflex loudspeakers in doors
- 115 dB dynamic range
- 5 analog inputs
- Specially developed DC converter optimised for authentic sound
- Intelligent drive for external acoustic lenses

DAB technology

Digital Audio Broadcasting (DAB) is a digital transmission standard for the terrestrial reception of radio programmes. Terrestrial means that the transmitter aerials are located at ground level (Latin: Terra). The aerial locations are normally used for analog FM radio.

366_036

The audio signals are digitised before they are transmitted and compressed into the MPEG-1 Layer 2 format. MPEG-1 Layer 2 is a compression method very similar to the well-known MPEG-1 Layer 3, better known under the abbreviation MP3 as a compression format for audio files on PCs.
The MPEG-1 Layer 2 format achieves for CD quality sound a compression rate of 6, i.e. the data volume is one sixth of that on an audio CD. By comparison, MP3 achieves a compression rate for CD quality sound of approximately 10.

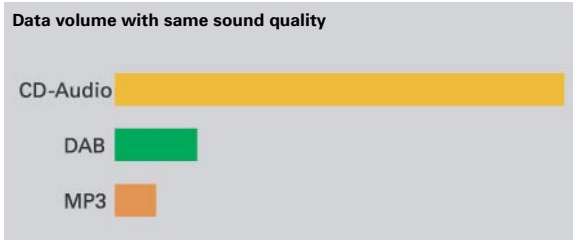

366_023

Both compression methods are lossey. Retrieval of the original, uncompressed audio data from this data is no longer possible. However, in a listening comparison between CD audio and MPEG compressed data with a high bitrate, no difference is noticeable, because, in the case of similar tones with markedly different volume levels, the human ear picks up the louder tone only. MPEG utilises this psychoacoustic effect by removing by removing from the digital information the tones which are not perceptible to the human ear.

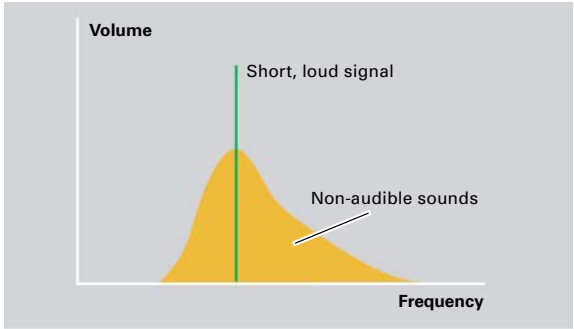

366_024

DAB stations use bitrates from 32 to 256 Kbits/s. Various stations with different bitrates can be grouped in an ensemble. Stations which broadcast only voice information require a low bitrate. Stations which broadcast music in a high sound quality require a high bitrate. The sound characteristics of the stations differ accordingly.

Example: several stations from the Bavaria ensemble

Station	Bitrate	Signal	Programme type
BR Traffic Radio	48 Kbits/s	Mono	Travel
BR B5 aktuell	96 Kbits/s	Mono	Information
BR BayernMobil	128 Kbits/s	Stereo	Pop Music
Rock Antenne	192 Kbits/s	Stereo	Rock Music
BR Bayern 4	192 Kbits/s	Stereo	Classical

For the transmission of digital information by aerial, several audio data streams including data services are grouped to form an "ensemble" . An ensemble is a group of stations which is transmitted on a single channel. In this way, multiple stations can be transmitted simultaneously in an ensemble until the total bitrate of all stations reaches the maximum total ensemble bitrate of 1.7 Mbit/s.

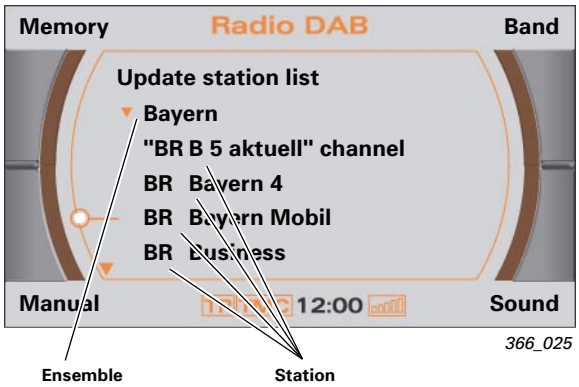

366_025

The ensemble is modulated by means of Coded Orthogonal Frequency Division Multiplex (COFDM). This method offers much better immunity to interference than analog broadcasting. COFDM also offers the advantage that it is possible to build a single frequency network.

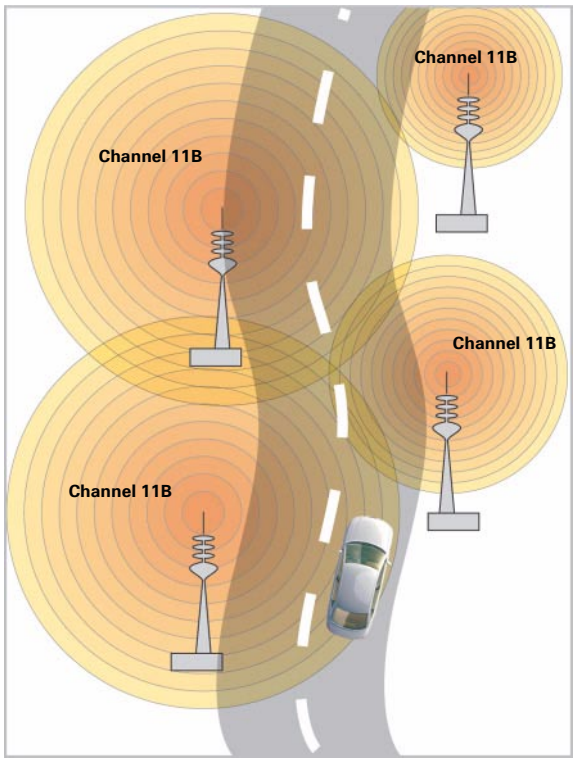

366_026

Single frequency network

A single frequency network transmits information through various stations to various locations on the same channel. Each ensemble uses up only one channel in the reception band throughout the coverage area. As a result, a single frequency network has several times the capacity of analog radio. Furthermore, DAB radio mixes the signals from the various stations to obtain better reception.

The signals follow various paths from the transmitter antennas to the receiver, due to reflection off buildings or natural obstacles. In the case of analog systems such as VHF, this leads to interference with reception while DAB also improves reception quality by mixing.

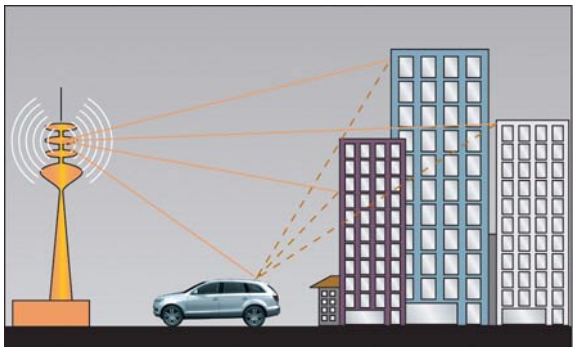

366_027

DAB uses the range from 1452-1492 MHz for the transmission of frequencies in band III (174-230 MHz) as well as in the L band. Band III is used for cross-regional ensembles. The L band is used to broadcast local ensembles.

366_034

Transmission of text data

In addition to the audio data, other information, such as radio text, is broadcast.
In analog radio systems, the station name is stationary on the station display, unlike in RDS. DAB also offers the "radio text" service, which supports digital radio R147. All dynamic text information, such as display of artist, title, messages or other additional text information, are broadcast through the "radio text" service. The radio text can be selected in the MMI using the "Manual" control key.

366_021

DAB information on the Internet

The Internet offers much more information on the topic of DAB. A large amount of information in English can be found at www.worlddab.org on the possibility for the reception of DAB in the various countries.

www.worlddab.org

This English-language web site provides a complete overview of the stations broadcast world-wide in ensembles.In addition to this, of course, the respective operators in each country also provide information in the respective national language.

www.wohnort.demon.co.uk/DAB/index.html

Digital radio R147

Integration in the MMI system

The digital radio optionally available with all MMI systems. Even if a digital radio is available in the vehicle, the vehicle nevertheless has an analog radio tuner R (K Box) for FM, MW and LW. As with all other infotainment control units, digital radio R147 is also integrated in the MOST data bus.

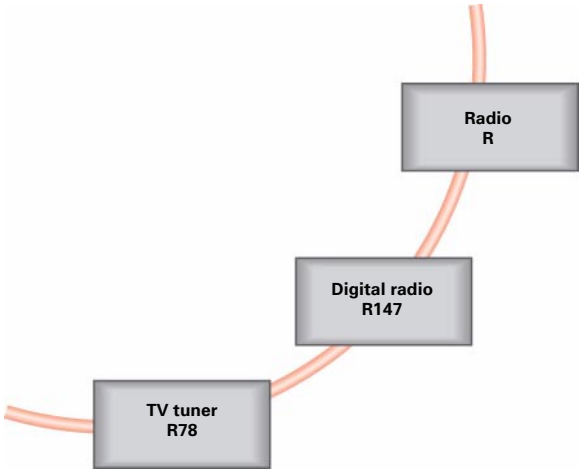

366_028

Update station list

Digital radio R147 is designed as a single tuner. For this reason, there is no auto tuning function which automatically updates the receivable ensembles. The station list has to be updated manually. Updating the station list can take approximately 1 minute. In countries in which the L band is not used (e.g. United Kingdom), it is recommended to deactivate the L band in the set-up. This will shorten the search time.

366_062

Station tracking (automatic FM tuning)

The MMI system checks automatically if DAB stations are additionally received via standard analog radio R as FM stations. If the DAB transmit signal received by the digital radio R147 is too weak, the MMI system changes over immediately to the same stations in the radio R. On the MMI display, the changeover is indicated by an (FM) after the station name.

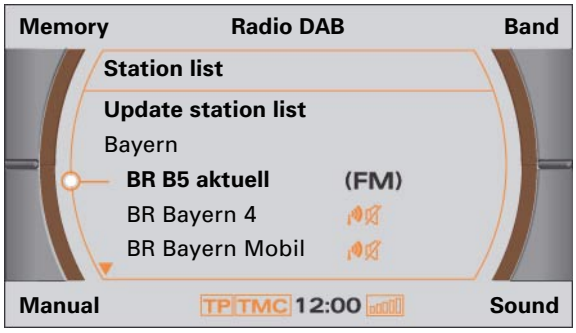

366_029

The MMI system remains set to FM reception for at least 30 seconds. This helps to avoid overly hectic switching between tuners. Unnecessary switching back and forth between tuners is undesirable, since the digital signal is transmitted as an ensemble with a delay of approx. 1 second compared to the FM signal, due to the need for digitisation, compression and compositing. The listener will be able to detect the changeover between stations due to repeated or missing words in a spoken sentence.

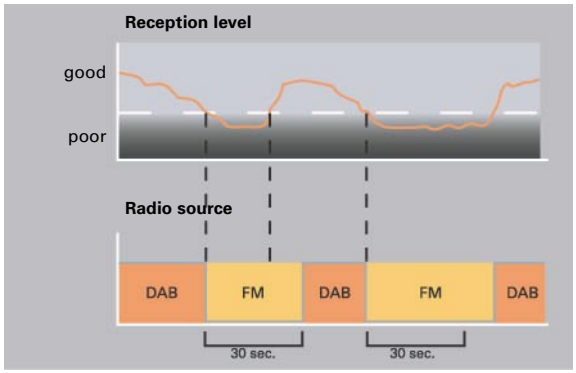

366_031

Radio Traffic Information

Radio Traffic Information can be activated or deactivated in the set-up of the digital radio.
The traffic information function of the DAB station is not used, rather the Radio Traffic Information function of the FM station which is configured in the radio R. The digital radio R147 in the MMI system behaves in exactly the same way as, for example, the CD changer or the TV tuner.
All traffic information services, such as TA, TP and TMC, are used only by the analog radio tuner R. Basically, DAB enables the VHF-RDS services TA (=Traffic Announcement) and TMC (= Traffic Message Channel) to be used digitally. Not all radio stations make use of these services, which means that, in practice, FM stations provide more comprehensive coverage for car drivers.

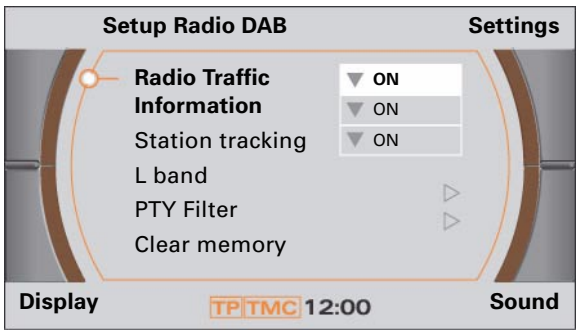

366_035

Installation location

The digital radio R147 is installed in the vehicle rear end adjacent the other Infotainment components.
In the Audi A8, the digital radio is attached to the mounting plate adjacent the K box as shown.
In the Audi A6 the digital radio is also installed in the vehicle rear end on the left-hand side.
In the Audi Q7, on the other and, the digital radio is installed on the right-hand side.

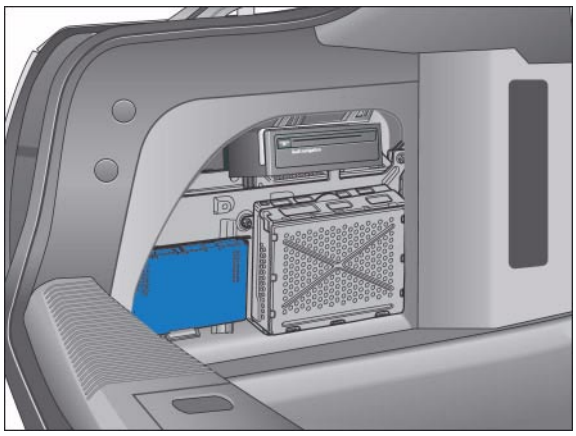

366_013

Function diagram

The digital radio R147 receives its power supply via terminals 30 and 31. As a control unit integrated in the MOST optical fibre circuit, it has an optical MOST terminal, as well as a line for optical fibre break diagnostics of the MOST control units.
The aerial lead is connected to the control unit by a black FaKra connector.

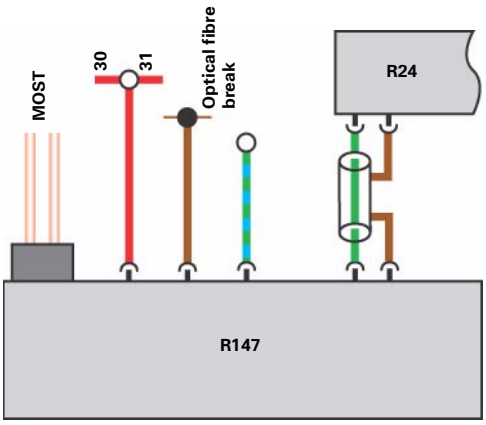

366_010

Legend

R24 Aerial amplifier
R147 Digital radio

Aerial

In the Audi A8, a DAB amplifier has been added to the aerial amplifier R24.
The aerial module with integrated DAB amplifier can be identified by the black FaKra connector.

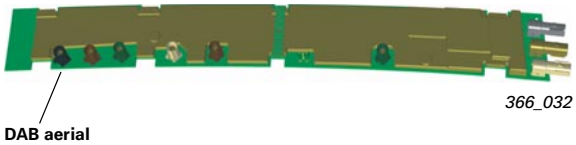

366_032

In the Audi A6 Avant and in the Audi Q7, the aerial is integrated in a side window. The associated aerial amplifier is installed directly adjacent, and likewise has a black FaKra connector.

Coding

The country configuration "Canada" can be encoded. In Canada, DAB is likewise transmitted in the L band frequency range (approx. 1.4 GHz). However, different frequency intervals are used between the individual channels. If the digital radio R147 is encoded incorrectly, reception in the 1.4 GHz range will be affected.

DVB-T technology

DVB-T is the abbreviation for Digital Video Broadcasting-Terrestrial and is the terrestrial variant of digital television. In addition to this terrestrial variant, there is also DVB-S for digital satellite television and DVB-C for digital cable television.

In the case of DVB-T, the audio and visual signals are compressed in accordance with the MPEG-2 standard and transmitted in the form of data packets. MPEG-2 is also used for data compression for DVDs. However, this does not mean that DVB-T is broadcast in DVD quality. The MPEG-2 technology is newer than the MPEG-1 technology, which is used for DAB. MPEG-2 is specially designed for the compression of video, i.e. relatively large volumes of data.

As with DAB, the information modulated using COFDM (Coded Orthogonal Frequency Division Multiplex). The arguments in favour of CODFM are the same as for DAB, the digital radio: immunity to interference, the possibility for the use of a channel-saving single frequency network to broadcast programmes and suitability for data transmission to moving receivers, e.g. vehicles. CODFM provides reliable signal transmission with a good level of resistance to interference and reflection.

Data can be transferred at a bitrate of 5 to 32 Mbit//s per channel. This is sufficient to broadcast 4 TV programmes. A group of programmes which can be broadcast over one channel is also referred to as a "bouquet".

Picture quality similar to that of analog television is possible. To achieve a high resolution, fast-moving images require a higher bitrate than slow-moving images. DVB-T allows for this. To improve quality, the stations can shift the bitrates between individual programmes in a bouquet so that action or sports scenes can be shown in high resolution.

Although DVB-T is intended for broadcasting TV programmes, radio programmes can also be broadcast via DVB-T.

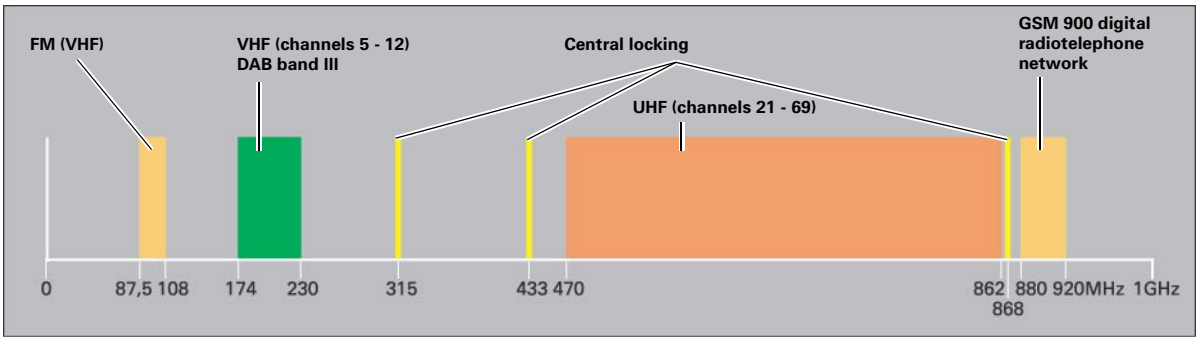

366_038

The VHF (very high frequency = 174 MHz to 230 MHz) and UHF(ultra high frequency = 470 MHz to 862 MHz) channelsknown from analog radio are used for transmission. For this reason, apart from the aerials already being used by the analog TV tuner, no additional aerials are required in the vehicle.

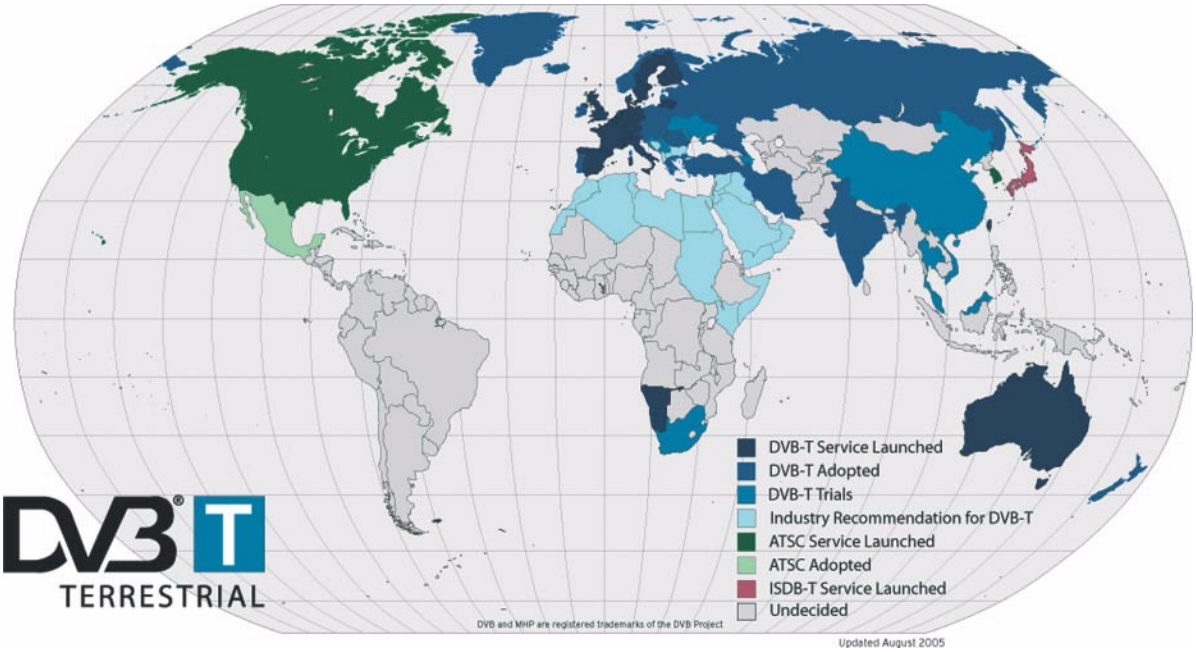

366_003

In addition to DVB-T, two other international standards exist: the US standard ATSC (Advanced Television Systems Committee) and the Japanese standard ISDB (Integrated Services Digital Broadcasting). The actual reception situation is shown on the map. The US and Japanese standards are not supported by TV hybrid tuners.

DVB-T information on the Internet

The Internet provides a lot more information on the topic of DVB-T. Detailed information on Digital Video Broadcast in the various countries can be found at www.dvb.org.

www.dvb.org

TV hybrid tuner

The word "hybrid" is of Latin original and means "mixed" or "composite".
The TV hybrid tuner is, therefore, a television receiver suitable both for analog and digital television reception. The tuner is equipped with three individual receivers, so tuning and diversity are simultaneously possible. The subdivision of the tuners into search tuners and reception tuners is performed differently for analog and digital reception, and will be explained in the following section.

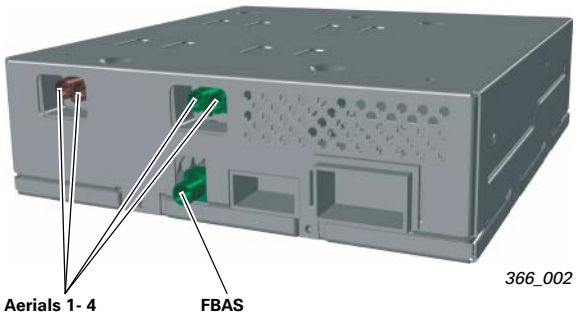

366_002

Order of display of programmes

In addition to television programmes, digital radio programmes can be broadcast via DVB-T.

The TV hybrid tuner shows the digital television programmes first in the station list, followed by the analog television programmes, then the television programmes which transmit no station name and finally the digital radio programmes. Each display block is sorted alphabetically.

The reception of digital radio programmes can be deactivated with the diagnostic tester.

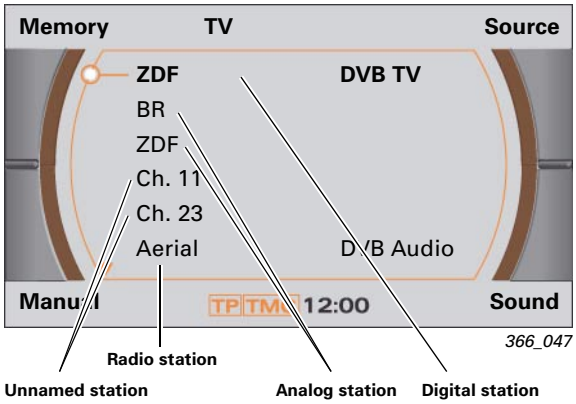

366_047

Teletext

The TV hybrid tuner is teletext capable, both in combination with analog television programmes and with digital television programmes. The teletext can be selected manually in the MMI menu and is operated with the control button.

366_044

Electronic Program Guide (EPG)

EPG is a data service provided by digital television programmes. Television companies use this data service to provide information about the programme being broadcast. EPG can also be selected in the MMI menu.
The TV tuner displays the information on the current programme and those which follow. If the programme is selected with the MMI button, the TV tuner displays, among other things, a brief description of the programme. EPG is not available with analog stations.

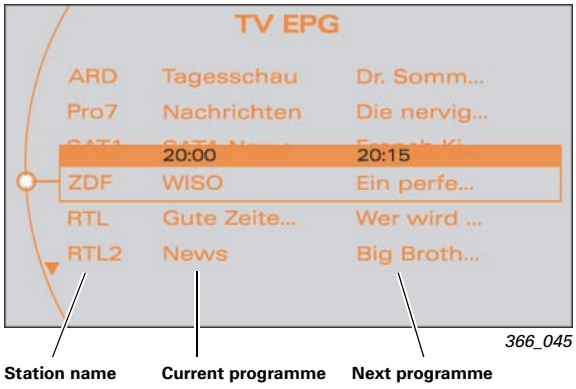

366_045

Setup TV

Picture parameters such as brightness, contrast, colour, picture format and TV standard can be adjusted in the TV set-up. The TV standard set in the MMI is always active during operation. If the MMI is reset to factory default, the encoded TV standard becomes the default.

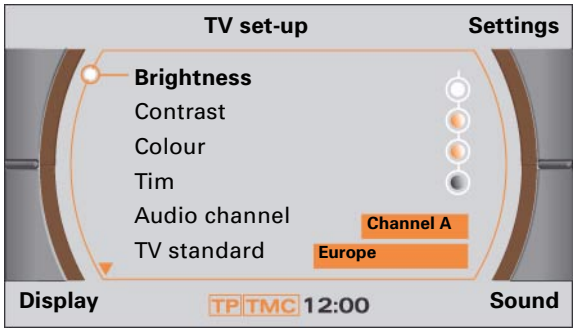

366_048

Dual audio

Like many stereo televisions for home use, the TV hybrid tuner is dual audio capable. In the case of a programmes broadcast in dual audio, a different language is broadcast on each audio channel. The programmes can only be broadcast in mono. Audio channel A or B can be set in the MMI.
The broadcasting company decides whether programmes are to be broadcast in dual audio. This information is often provided in television programme guides.

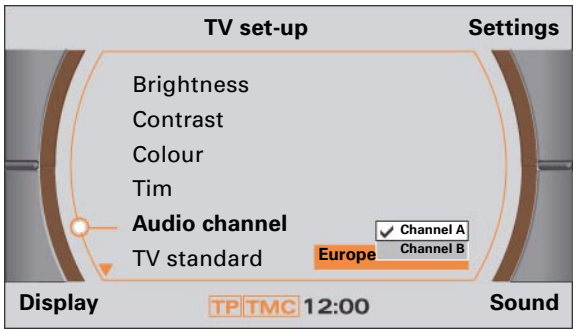

366_051

Station tracking

The station tracking function makes it possible to toggle automatically between a digital station and the same analog station with the result that the television station is received via an analog channel when the vehicle leaves the digital coverage area. The prerequisite for this is that both stations use the same programme name.
If a station broadcasts the same programme to various locations with different station names, station tracking is not always guaranteed.

When driving in a border region between digital and analog television, unnecessary switching back and forth between stations by the tuner can be avoided by deactivating the station tracking function.
The tuner will now stay tuned to the selected digital or analog programme.

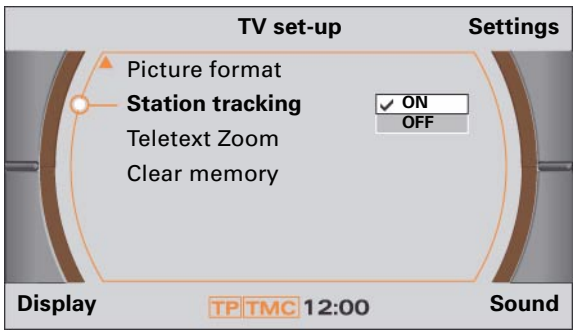

366_052

Installation location

The TV hybrid tuner is installed in the same position as the previous analog TV tuner. In the Audi A8 and A6, this is in the luggage compartment at the rear left. In the Audi Q7, the TV tuner is installed in the luggage compartment at the rear right (see SSP 361). The illustration shows the installation location in the A8.

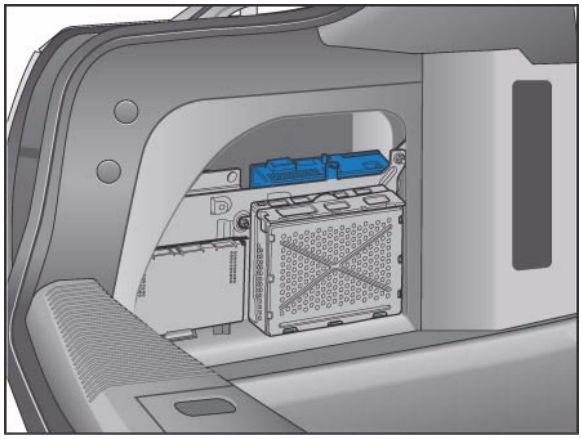

366_014

Function diagram

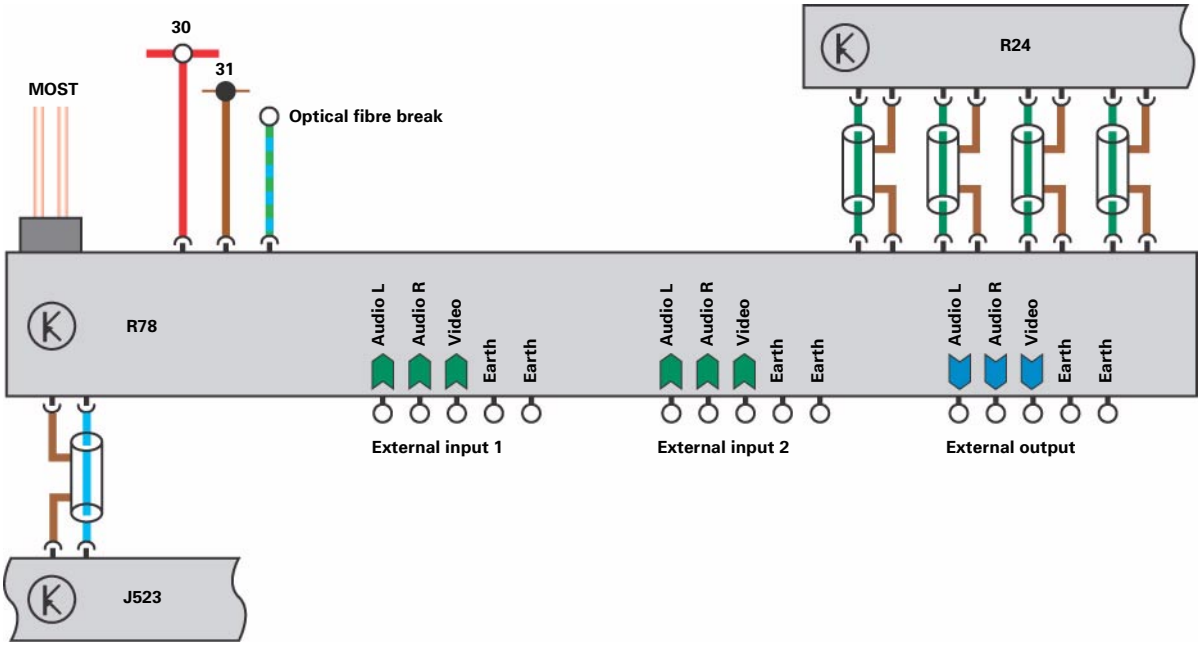

366_009

Legend

J523 Front information control unit
R24 Aerial amplifier
R78 TV tuner

The TV tuner receives its power supply via terminals 30 and 31. As a control unit integrated in the MOST optical fibre circuit, it has an optical MOST terminal, as well as a line for optical fibre break diagnostics of the MOST control units.

Two inputs are available for audio and video signals (e.g. Rear Seat Entertainment, mobile devices such as CD player, DVD player or the like), as well as one output for audio and video signals. Mobile end user devices can be connected to the TV tuner by a pre-terminated adaptor cable, available from the spare parts catalogue.

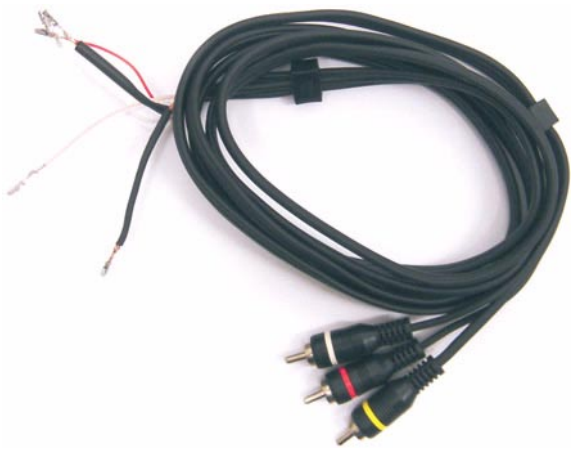

366_046

The inputs can be selected in MMI under CD/TV -> Source function key. For safety reasons, the video signal is deactivated in the front information control unit J523 while driving. The audio channel remains active while driving so that the inputs, e.g. for MP3 player or the like, can be used. External devices cannot be controlled via the MMI.

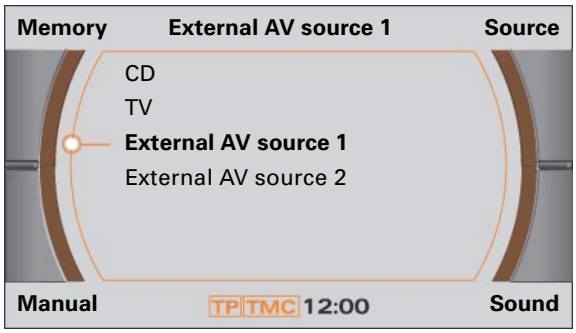

366_053

Integration into the MOST bus

The TV hybrid tuner is optionally available with all MMI systems with colour screen. As with all other infotainment control units, TV hybrid tuner R78 is integrated in the MOST data bus. The tuner is currently available in one MOST variant only.
A variant for other vehicles is currently under preparation. This tuner can be connected to devices with a colour screen by means of the 54-pin connector.

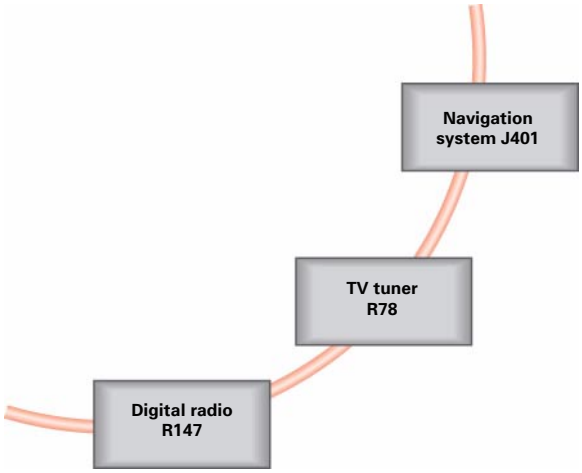

366_028

Function during reception of a digital station

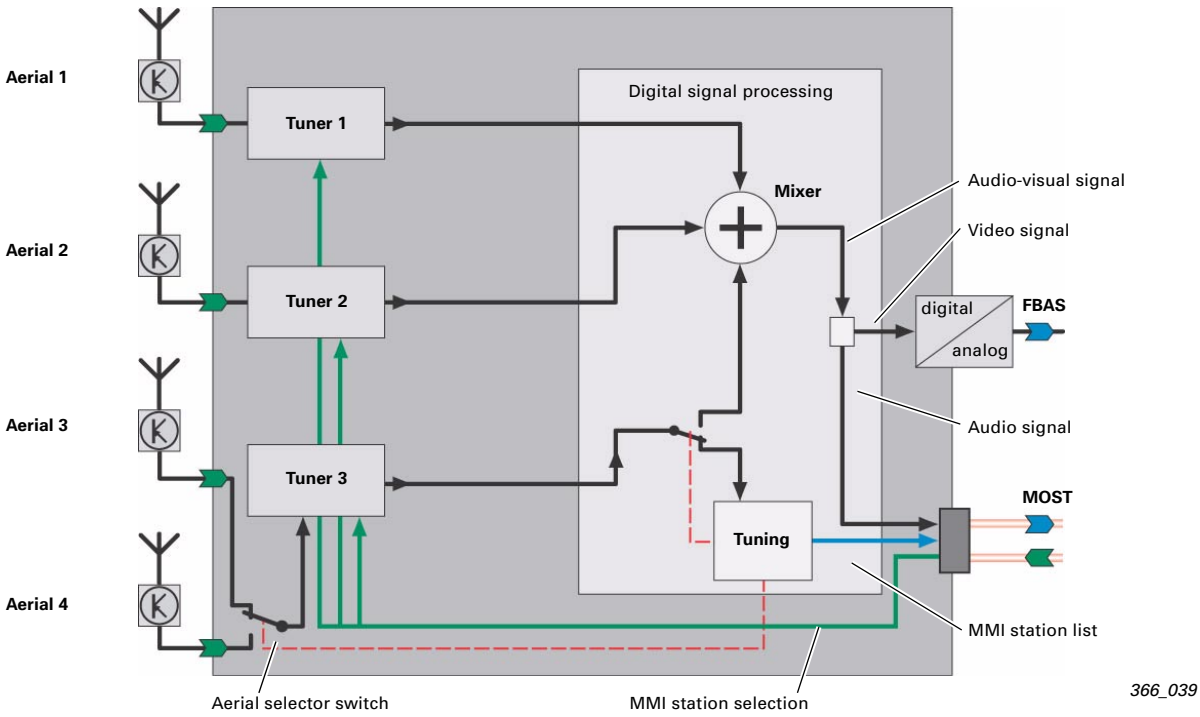

The TV hybrid tuner has three independent internal receivers. Tuner 1 receives the signal with aerial 1. Tuner 2 receives the signal with aerial 2. Both bits of digital video information are added in the mixer.

Tuner 3 receives the signal from aerial 3 or aerial 4. In search mode, the station list is updated with tuner 3 and aerials 3 and 4. In reception mode, the audio-visual information from the adjusted station is added to the signal from tuners 1 and 2 in the mixer with tuner 3.

The audio information from the composite signal of all tuners is then relayed to the MOST bus, while the video information is converted to an analog FBAS signal (see SSP 293). The analog video signal is, as with previous TV tuners, transmitted along a coaxial cable to the front information control unit J523.

If only one tuner were to be used for audio and video reception, the reception quality would be relatively poor, because all aerials in the vehicle have a directional characteristic. Reception is good if the aerial is perfectly aligned. In the case of home aerial systems, this effect is used by rotating the aerial towards the station. This is not possible in vehicles.

If the vehicle is travelling in a circle, reception will vary depending on the directional effect of the individual aerials. While driving, therefore, the different aerials receive the signals of varying strength from the set stations. For digital operation, this means that loss of signal can occur if reception is bad. In practise, each aerial and tuner show loss of signal at different times. The digital TV tuner utilises this effect by adding the signals from 2-3 tuners. In case of bad reception, this means much less loss of signal than would be the case if only one tuner were installed. Good audio-visual signal quality is maintained even though quality of reception has dropped.

366_050

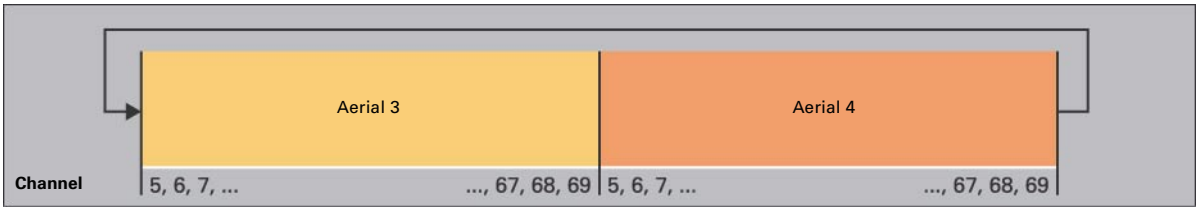

366_042

Tuner 3 receives the signal from aerial 3 or aerial 4. The signal is used temporarily for tuning purposes. During this time, only tuners 1 and 2 are used for picture evaluation purposes. The auto tuning automatically updates the station list. The tuner uses one aerial to search all channels for receivable stations. After this, it switches over automatically to the other aerial, and again searches all channels for receivable stations. This process is then repeated. Continuous tuning is not necessary, because the station list only requires updating at relatively long time intervals. If no tuning is needed, tuner 3 is also used for audio and video reception.

In TV tuner R78, the changeover between aerial 3 and aerial 4 can be deactivated by encoding. If the changeover is deactivated by encoding, the switch stays continuously set to aerial 3. This function is available for vehicles with 3 receiver aerials, but is currently not in use.

Function during reception of an analog station

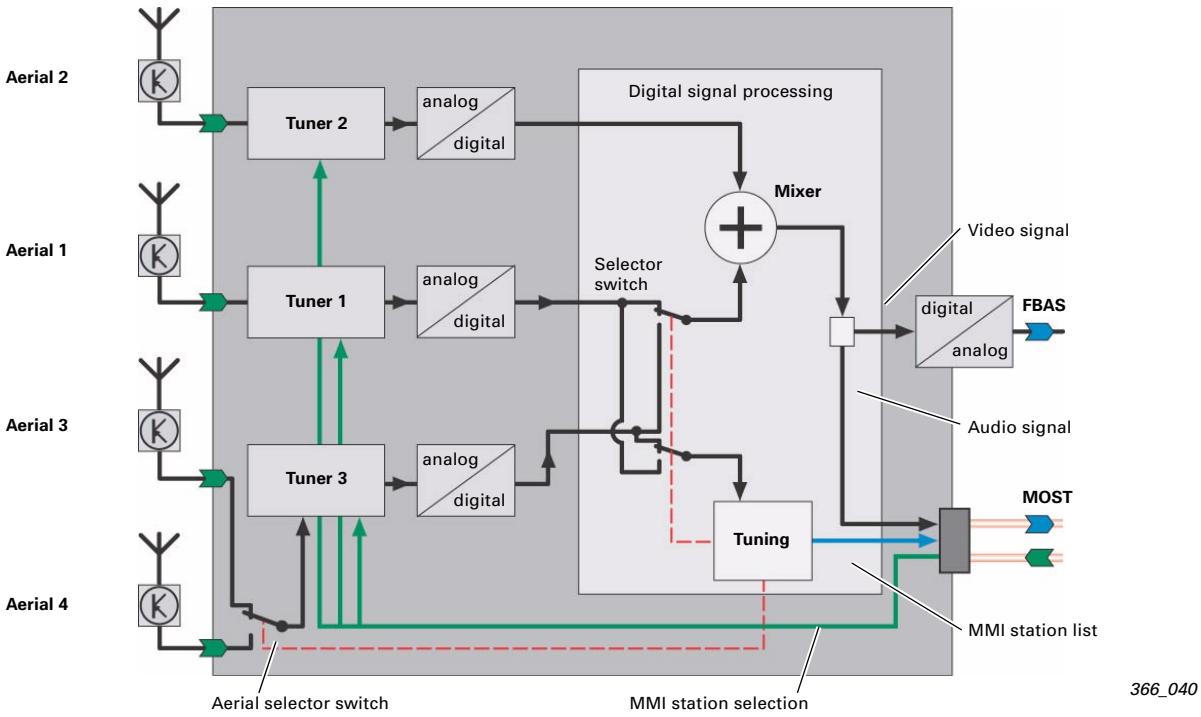

Unlike the reception of digital stations, a different concept is used during reception of analog stations in order to ensure optimal analog audio and video signal quality.

Because analog stations are received, the signals from the tuners must be converted with analog-to-digital converters prior to digital signal processing.

If an analog station is selected in the MMI, only one tuner is in search mode at any one time. This is either tuner 1 or tuner 3. The changeover is performed electronically in the digital signal processing unit.
Tuner 2 and the tuner which is currently not in search mode are used for audio and video reception of the selected television channel.

Future function: multi-standard tuning

In future, auto tuning will be possible across various TV standards. In normal operation, auto tuning is performed only in the television standard configured in the set-up.

In a multi-standard tuning system, the television programme is saved in the station memory together with the associated television standard. The tuning routine takes into consideration the television standard stored in the set-up, as well as the television standards of all stations stored in the station memory. This may extend the search time accordingly.

If, for example, stations from Italy, France and Switzerland have been stored, the tuning routine runs through all 3 television standards.

This function is not included in the original TV tuner.

Non-supported digital television functions

Encrypted stations which require a decoder or a smartcard for reception cannot be received by the TV hybrid tuner.

The Multimedia Home Platform Standard, MHP for short, specifies the transmission and representation of interactive content in digital television. The MHP standard provides not only broadcast information such as information pages, games, programme list, extensive EPGs, but also interactive services which require an additional back channel, such as polls, quiz questions and the like. MHP is not supported by the TV hybrid tuner.

The standards for high-resolution television (HDTV) and for television on handhelds (DVB-H) are not supported either.

Aerials

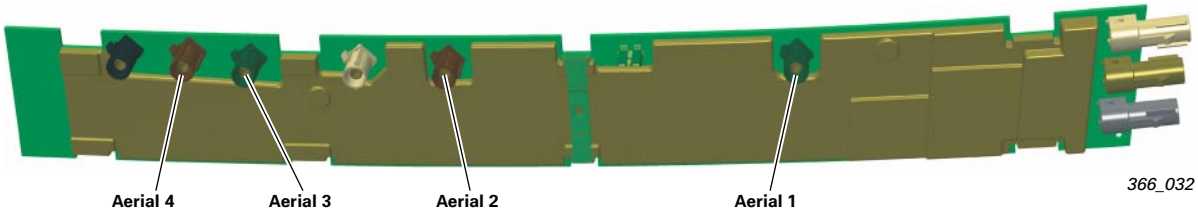

366_032

The TV hybrid tuner uses the same aerial system as the previous analog TV tuner.

As the TV hybrid tuner connects the cable shield of the aerial cable to its enclosure ground via capacitors, the aerial amplifier can no longer use the cable shield as a ground line.
The aerial amplifier requires only the ground line directly connected to the aerial amplifier for operation.

Diagnosis

If the TV picture in the MMI is selected, various measuring and coding values are displayed directly during diagnosis of the TV tuner with the diagnostic tester on the MMI screen. This provides a quick overview of, for example, the function of the aerials, the supply voltage and the like. All of these values can also be read out with the diagnostic tester using the "Read data block" or "Coding" function. It is not possible to display the values on the MMI screen without selecting the address word 57 TV tuner with a diagnostic tester connected.

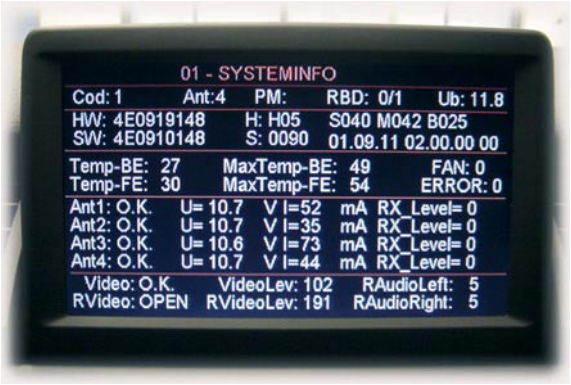

366_049

Coding

Various types of vehicle can be encoded. The coding adapts the TV tuner to the respective aerial system, as well as the fan control in the TV tuner. In the default coding, the TV tuner switches to energy-saving mode if a source other than the TV tuner is selected in the MMI. To supply the rear seat entertainment system with signals via the external output even when a different audio source is selected in the MMI, TV tuner R78 must also be re-encoded. Only then is audio and video output (e.g. via headphones) possible at the rear seat entertainment system, even though the driver is listening to a CD, for instance.

The encodable TV standards have, compared to the analog TV tuner, been supplemented to include Russia and various Asian TV standards, with the result that 26 different TV standards can now be encoded.

List of receivable television standards

Country	Television standard
Central Europe	PAL B/G
Italy	PAL B/G
United Kingdom, Ireland	PAL I
Eastern Europe - SECAM	SECAM D/K
France	SECAM L
North America	NTSC M
Australia	PAL B/H
Brazil	PAL M
Argentina	PAL N
New Zealand	PAL B
Eastern Europe PAL	PAL D/K
PR CHINA	PAL D/K
Africa PAL	PAL I
Greece, Egypt	SECAM B/G
Africa SECAM	SECAM K1
Japan	NTSC M
Morocco	MOROCCO
Eastern Europe OIRT PAL	PAL B/G
Eastern Europe PAL	PAL B/G
Asia PAL	PAL B/G
South America	NTSC
Asia NTSC	NTSC M
Russia	SECAM D/K
India	PAL B/G
China / Hong Kong	PAL I

366_063

SSP 286 New Data Bus Systems (MOST)

- LIN bus - the single-wire data bus
- MOST bus - the optical data bus
- Bluetooth™ - the wireless data bus
- Diagnostics bus

Order number: 000.2811.06.20

366_064

SSP 293 Audi A8 ´03 Infotainment

- Infotainment
- Sound System
- Radio Module
- Navigation
- Telephone/telematics

Order number: 000.2811.13.20

SSP 326 Audi A6 ´05 Electrical Systems

- Networking
- Bus Topologies
- Convenience Electronics
- Infotainment

Order number: A04.5S00.09.20

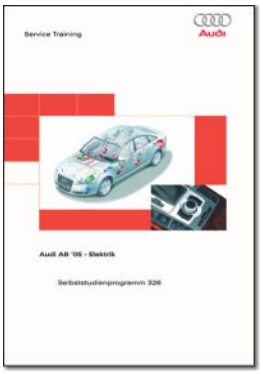

375_042

Vorsprung durch Technik **www.audi.de**

366

All rights reserved. Technical specifications subject to change without notice.

Copyright
AUDI AG
I/VK-35
Service.training@audi.de
Fax +49-841/89-36367

AUDI AG
D-85045 Ingolstadt
Technical status: 10/05

Printed in Germany
A05.5S00.19.20